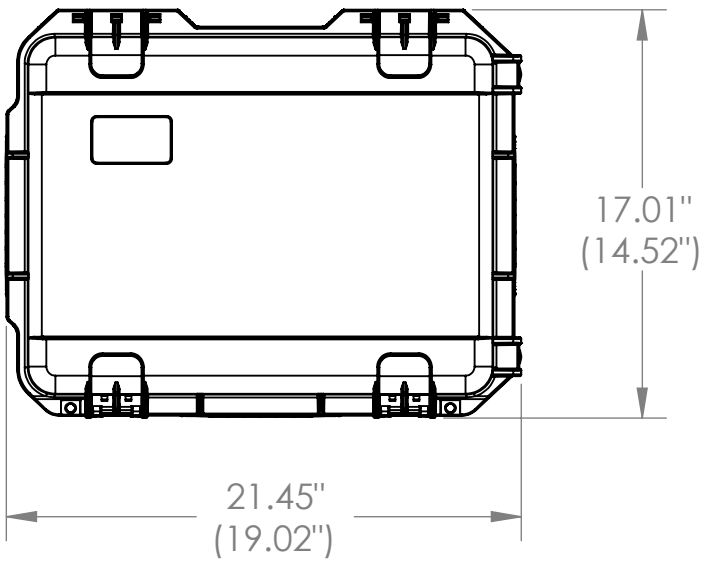

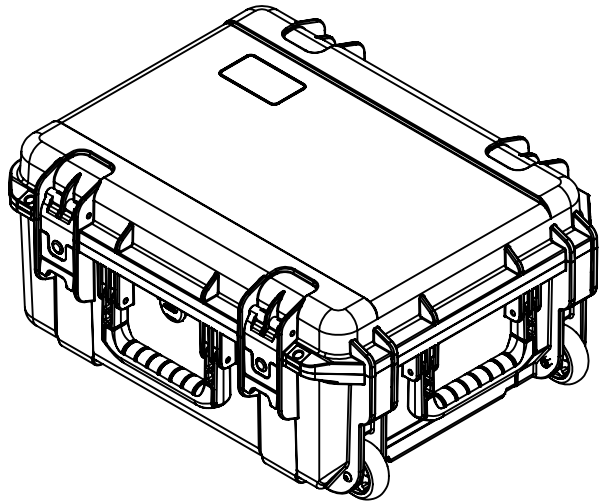

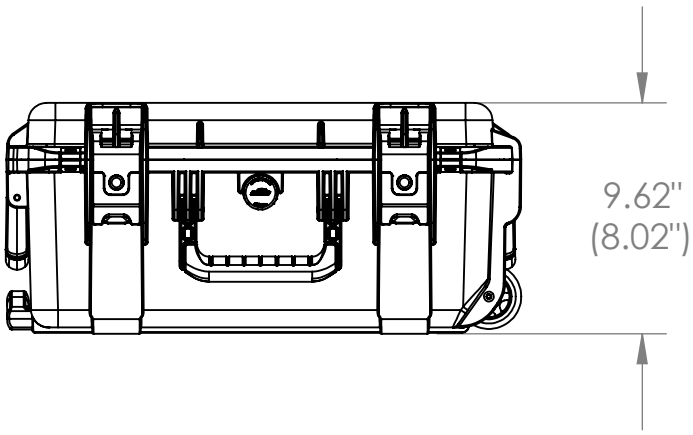

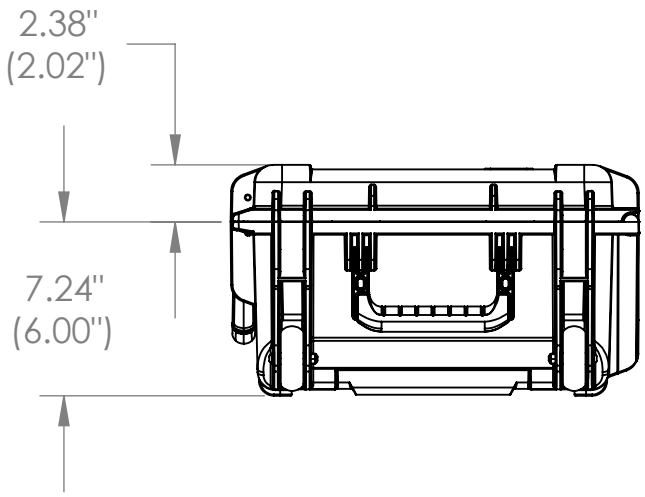

3i-1914-8

NOTE: DIMENSIONS IN (X.XX) ARE ID

434 West Levers Place
Orange, CA 92867
Phone: (714) 637-1252
Fax: (714) 637-0491
http://www.skbcases.com

Case Series:	3i Series	Dimensions (for reference only)			
Case part#	3i-1914-8		Length	Width	Overall	Base / Lid
			left to right	front to back	height	height
Weight:		Exterior	21.45"	17.01"	9.62"	7.24"-2.38"
		Inerior	19.02"	14.52"	8.02"	6.00"-2.02"

5 4 3 2 1